The Rules and/or regulations set forth herein are designed to provide for orderly conduct of racing events and to establish minimum requirements for such events. These rules shall govern the conditions of all Columbus Motor Speedway events, and by participating in these events, all participants, guests, race members and staff are deemed to have complied with these rules. No express or implied warranties of safety shall result from publication of, enforcement or compliance with these rules and/or regulations. They are intended as a guide for the conduct of the sport and are in no way a guarantee against injury or death to participants, spectators or others. The race director shall be empowered to permit minor deviation from any of the specifications herein or impose any further restrictions that in his opinion do not alter the minimum acceptable requirements. Interpretation of or deviation from the rules is left to the discretion of the officials.

CONDUCT

1. The race driver shall be the sole spokesman for his car owner and pit crew in any and all matters pertaining to an event. At all events and functions the driver assumes responsibility for the actions of his crew.

2. Any fighting or reckless driving may result in suspension of the offender depending on the seriousness of the incident. Continuing problems from the same offender may result in permanent suspension. The NASCAR rulebook may dictate fines and or penalties.

3. Columbus Motor Speedway will not tolerate profanity, discourteous gestures or conduct in front of fans or race officials.

4. Penalties and fines for violation of the rules and/or regulations set forth in this publication may be implemented per the NASCAR rulebook to all participants (NASCAR members & non-members) at the discretion of the officials.

5. The possession, consumption or distribution of ANY controlled substance on speedway property, including parking areas is strictly prohibited. Possession or consumption of any alcoholic beverage is prohibited in the pit area. NASCAR procedure will be used to deal with all participants as it relates to alleged use, distribution or possession of drugs, narcotics or alcohol.

6. FIGHTING WILL NOT BE TOLERATED ON SPEEDWAY PROPERTY.

7. The promoter reserves the right to enforce, update or cancel any of these rules stated herein for the betterment of racing.

BENEFITS AND INSURANCE

1. The speedway assumes no responsibility for damage to, or loss of your equipment, vehicle or any cars.

2. Minors must obtain the proper release forms. These forms must be completed in advance and include the signature of parent or guardian.

3. Everyone should familiarize themselves of the insurance benefits along with the waiver and release signed at every event. Participant insurance coverage's will be coordinated with any other insurance. If you have other insurance, it will be required to contribute in case of injury.

PARTICIPANT BENEFITS

Participants are urged to contact the speedway office at any time during the week to discuss any aspect of insurance. Also, if you have any questions about the waiver and release you sign at the pit gate contact the speedway.

LIABILITY INSURANCE

Columbus Motor Speedway carries liability insurance covering the track, car owner, driver and sponsors. Certificates are available at the speedway office.

CLAIM/INJURY INFORMATION

In the event of an injury advise the speedway officials immediately so that the necessary reporting can be accomplished. NO CLAIMS will be considered unless reported prior to leaving the speedway property that day. If the injured person is physically unable to do so, your crew must do it for them.

PREVAILING POLICY

1. Race Officials will resolve any Disagreement over technical questions or track operation. THEIR DECISIONS ARE FINAL.

2. Speedway management will determine the length, frequency and administration of all events. Exceptions to the rules and specifications may be made on a temporary basis at the discretion of the officials.

3. The management and officials will determine all finishing positions. Their decision is final.

4. DUMPING ANY OIL, GAS OR ANY OTHER CONTAMINANT ONTO THE GROUND IS STRICTLY PROHIBITED.

5. DO NOT LEAVE DISCARDED TIRES IN THE PIT AREA.

RACE TRACK OPERATING PROCEDURE

1. Only race officials and race cars are permitted on the racing surface. Drivers must seek a place of safety following disablement of their race car. The driver is permitted to examine damage to his race car at the scene of the accident ONLY. Pit crews are not allowed on the racing surface.

2. Any vehicle whose speed has been reduced to a point where it has become a safety problem will be disqualified.

3. When the caution is displayed you should be aware of the car number in front of you. Line-ups will be communicated to drivers via radios.

4. No driver may get out of his car on the track to argue or discuss the race with officials.

5. You must attempt to start your heat or dash event to retain your regular feature starting position. In case of mechanical problems you must consult an official.

6. All driver changes must be reported to an official prior to the start of an event. If a car starts a race with a driver other than the person that qualified it, it must start on the tail.

7. If you return to the pits at any time, you cannot re-enter the track under green flag conditions unless so directed by the pit-gate flagman. If you re-enter under yellow or red you must start at the tail. Reentry to a race is only permitted in the feature events of the Late Model, Modified and Sport Stock divisions.

PAY-OFF PROCEDURES

1. The starting driver earns all points and monetary awards.

2. THE DRIVER MUST PICK UP HIS OWN MONEY at the tower office located at the base of the tower.

3. The driver must show proper identification and provide his Social Security number when claiming any earnings.

POINTS AWARDS

"Regular Race"

QUALIFYING POINTS		FEATURE POINTS	
1. 25	13. 13	1. 50	13. 26
2. 24	14. 12	2. 48	14. 24
3. 23	15. 11	3. 46	15. 22
4. 22	16. 10	4. 44	16. 20
5. 21	17. 9	5. 42	17. 18
6. 20	18. 8	6. 40	18. 16
7. 19	19. 7	7. 38	19. 14
8. 18	20. 6	8. 36	20. 12
9. 17	21. 5	9. 34	21. 10
10. 16	22. 4	10. 32	22. 8
11. 15	23. 3	11. 30	23. 6
12. 14	24. 2	12. 28	24. 4

"Championship Race"

QUALIFYING POINTS		FEATURE POINTS	
1. 50	13. 26	1. 100	13. 52
2. 48	14. 24	2. 96	14. 48
3. 46	15. 22	3. 92	15. 44
4. 44	16. 20	4. 88	16. 40
5. 42	17. 18	5. 84	17. 36
6. 40	18. 16	6. 80	18. 32
7. 38	19. 14	7. 76	19. 28
8. 36	20. 12	8. 72	20. 24
9. 34	21. 10	9. 68	21. 20
10. 32	22. 8	10. 64	22. 16
11. 30	23. 6	11. 60	23. 12
12. 28	24. 4	12. 56	24. 8

- Track points are awarded for a driver's qualifying position and feature finish position each night.

2016 LATE MODEL SPECIFICATIONS

1) This division limited to American made vehicles with a factory (stock) wheelbase of at least 103". All cars, except, ABC body option, must maintain a minimum wheelbase of 105".

2) BODY - Any American made BODY with a factory (stock) wheelbase of 103" maybe used. (No Camaros, Firebirds or Mustangs) Legal template style bodies are limited to the following:

1997 - 2007 Chevrolet Monte Carlo
2008 – 2012 Chevrolet Impala
2013 – 2016 Chevrolet SS
1999 - 2006 Ford Taurus
2006 - 2016 Ford Fusion
2001 - 2005 Dodge Intrepid
2005 – 2016 Dodge Charger
2008 - 2016 Toyota Camry
1995 - 2007 Pontiac Grand Prix

Body must be stock appearing. Cars must have complete and unaltered asphalt-style template nose piece (sides of nose piece must remain intact back to wheel opening), rear bumper cover and template roof, roof C pillar, windshield and rear window. Body parts must be securely attached. ABC template bodies will use ABC (Approved Body Configuration) dimensions and contours (see ABC Body Option). At all times, the ABC "A" measurement must maintain a min. length of 11.5 inches. Also, 20 inches is the min. length allowed for the nose, measured from the bottom, leading edge at center, up to the hood seam.

ABC TEMPLATE BODY OPTION – ABC template bodies that conform to ABC measurements and templates, will be permitted (refer to ABC Body Rule Book supplement). For cars using the ABC Option, ABC Body rules take precedent over non ABC body rules. ABC bodied car rules will deviate from the non ABC rules as follows:

A) Minimum wheelbase is 102"
B) Rear spoiler of 6 ½" will be permitted (standard ABC option).
C) Engine setback of 3" will be permitted (Ball joint to forward most spark plug thread socket).
E) Left side weight will be a maximum of 58%

Non ABC body dimensions must fall within the following dimensions:

NOTE: A 10” by 20” portion of each front fender must be set aside for NASCAR contingency sponsor decals.

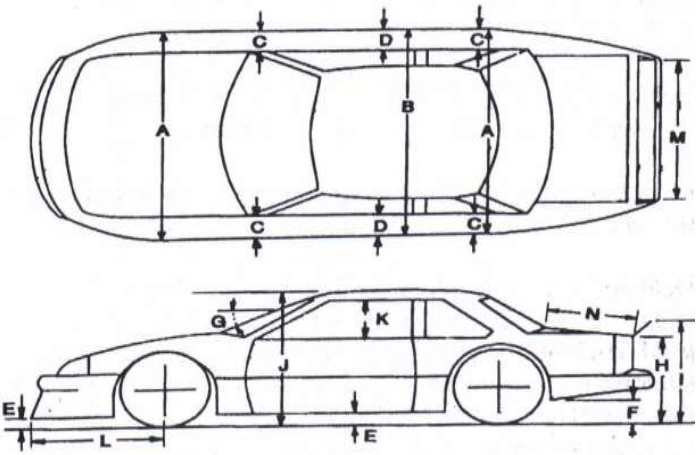

DESCRIPTION OF MEASUREMENT	NON ABC DIMENSION
A) Width of body at front & rear tires	max 79 1/2”
B) Width of body at door skins	max 79 1/2”
C) Flat spot on top of body at front windshield and rear window post	max 3 1/2”
D) Flat spot on top of doors	max 3 1/2”
E) Ground clearance of nose-piece & between tires (wet, with driver)	min 4”
F) Ground clearance immediately behind rear tires (See “FENDERS” rule below)	min 11”
G) Angle that front windshield to ground plane	min 25 degrees
H) Height of back of rear quarter-panels to ground	max 35”
I) Height of top of rear spoiler to ground	max 39”
J) Height of roof to ground plane (Measured 10” back from windshield and ahead of rear glass)	min 45”
K) Side window vertical opening	min 15”
L) Center of front hub to front nose-piece/spoiler	max 46”
M) Width of rear deck-lid spoiler	max 60”
N) Rear window to base of spoiler	max 23 1/4”

REAR SPOILER - Must be made of a single piece of see-through material with a maximum width of 60”. A maximum 4” spoiler is allowable on non ABC bodied cars. No spill boards or verticals allowed. No air ducts or dams permitted under car. Spoiler may be mounted no more than 45” behind center of rear axle. Spoiler may be braced from the front or rear. No more than three front braces are permitted and must be round tubing of a maximum diameter of ¾”. Rear bracing must be inset a minimum of 3” from end of spoiler. No spoiler lips, breaks or ledges will be permitted.

REAR BUMPER COVER - Cars MUST use a complete, unaltered stock or aftermarket bumper cover. Rear quarter panels must follow contour of bumper cover and may not cover the sides of the rear cover.

DOORS - Door edges must have at least a 1/2" radius. No 90-degree breaks or "knife-edging". Cars without left front door may not compete.

DECK-LID - Top surface of deck-lid must not be dished. No area of deck-lid may be lower than the top of the quarter-panels.

FENDERS - A minimum of 1/2" radius is required on top of fenders. No 90-degree breaks or "knife-edging" permitted. Rear fender flap immediately behind rear tire must angle up in a straight line from a minimum 10" ground clearance to bottom edge of rear Bumper Cover. Width of rear fenders must gradually taper from rear tires to back of quarter-panels. (No straight quarters with an abrupt kick-in just before rear spoiler) Hood must cover air cleaner and carburetor. No forward facing hood scopes. Rear window matching body style is required. Front fenders and hood must maintain stock contour with no flat or concave surfaces. No wedge fenders or hoods.

RUB RAILS – Rub rails are permitted between wheels and must be no more than 1" by 1". They should be welded or bolted to body or door bars. No sharp edges. Side jack points may not protrude outside body.

CARS THAT VARY TOO RADICALLY (in the opinion of track officials) FROM STOCK WILL NOT BE PERMITTED TO COMPETE.

3) WINDSHIELD / WINDOWS – Lexan / polycarbonate front windshield, rear glass and rear quarter windows (at least 1/8" thick) are required. A minimum side window opening of 15" vertical (at B pillar) will be permitted. No Driver or Passenger windows are permitted other than wing vents extending no further back than the rear-most part of windshield. Rear edge of vents must be perpendicular down to door ledge. No interior ducting may be used or attached to "B" pillar.

4) SUSPENSION – All suspensions must conform to the following: Front spindles may be replaced with heavy-duty after-market units. Shock absorbers must be, non-adjustable, with no external canisters and a retail price of no more than $360.00. Maximum of one shock per wheel is permitted. No clicker shocks, external or shaft adjustable shocks permitted. Front springs are limited to minimum of 3"diameter regardless of body type. Wedge bolts are permitted. No fifth coil or birdcage rear suspensions permitted. Rubber bushings or spring/shock actuated torque arms are permitted on rear suspension arms. Rack and pinion steering is permitted. Coil-over/slider suspension systems are permitted. Upper and lower A frame/struts may be fabricated after market. Maximum tread width 67"on all cars, regardless of body style.

5) BUMPERS - Bumpers should resemble contour of stock unit. Crash bars must be under nosepiece. An external tow hook capable of supporting the weight of the car recommended.

6) FRAME – Tubular mild or Chromalloy steel fabricated frames are permitted. Main frame rails must be constructed of at least .095" thick mild or Chromalloy steel measuring at least 10" in perimeter**.**

7) ROLL CAGES - Full cage required, with four uprights at least 1.625" O.D. with .095" thickness mild or Chromalloy steel - welded to main frame rails. Top of cage should form a box and follow the contour of the windshield in front. Three door bars are required on both sides. Door bars must run between front and rear roll cage posts. Driver side door bars must be plated with a minimum 16 gauge (.065") steel plate. Gussets should be used where possible. Bars around driver must be padded. SFI spec 45.1 padding is required. Cages must be approved.

8) INTERIOR - All cars must have complete firewall, front and rear. Front firewall extending from the left side frame rail to the middle of the interior floorboard is required. It must extend under the driver including the foot pedal area and rear firewall directly behind the driver and must be at least 20-gauge steel. The remaining interior may be aluminum (.025" min.). Interior sheet metal beside driver must run no higher than from the seat cushion at an angle to the bottom of the window opening. Racing seat required, bolted/welded to chassis.

9) FUEL CELL - Maximum 22 gallon SFI approved commercial type fuel cell bladder with foam insert required. Cell must be mounted in trunk area, between frame rails, with bottom of cell no lower than the bottom of the rear end center section. Cells must be secured by a frame work using a minimum of 1" square tubing. Rear protective bars strongly suggested.

10) WEIGHT – All cars must weigh a minimum of 2,800 lbs, wet with driver. Weight must be securely bolted, or welded to chassis. Left side weight is not to exceed 58% of total vehicle weight, wet with driver on ABC bodied cars. Left side weight is not to exceed 56% of total vehicle weight, wet with driver on non ABC bodied cars.

11) ENGINE - Any displacement factory produced **V8** engine with cast iron block and cast iron or aluminum heads permitted. Engine, chassis and body manufacturer need not match. All engines must be mounted such that the forward most spark plug thread socket is even with, or in front of a line connecting the top two ball-joints. ABC bodied cars will be permitted a 3" engine set back. Centerline of Crankshaft must be a minimum of 10 1/2"to ground plane. Carburetion limited to one US manufactured 4 barrel. Intake manifolds must be of aluminum or cast iron construction. Any stock or after-market replacement for stock distributor may be used. Magneto and/or multiple coil type ignition systems are not permitted. Ignition control boxes (MSD boxes) must be mounted in clear view and out of driver's reach while in seat. Ignition switch should have "on-off" positions marked and within reach of the driver.

12) EXHAUST SYSTEM - Must be safe and meet approval. **MUFFLING DEVICES ARE MANDATORY**. Exhaust pipes may not pass through the driver's compartment. Exhaust pipes must exit below and behind the driver. Exhaust may pass through the lower third of exterior body panels. Noise levels will be monitored with a decibel meter and violators may be fined or disqualified.

13) STARTERS/BATTERIES - All cars must have working starter and battery. All batteries must be securely mounted & covered.

14) FUEL LINES - Fuel lines must be securely mounted and protected. Fuel lines running through the driver's compartment must be steel braided or equivalent. No electric fuel pumps permitted.

15) FUEL - Only straight gasoline or racing fuel is permitted. No nitro or alcohol.

16) DRIVE TRAINS - Transmissions must have a minimum of two forward and reverse gears. All cars with a manual transmission must have a working, spring-actuated clutch. No hand clutches. Drive shafts must have at least one 360-degree safety strap/loop directly behind front universal joint. Quick change rear ends are permitted. Floater rear ends required.

17) WHEELS/BRAKES - Maximum 10" wheel width permitted. All wheels must be steel-racing type. Wheel lugs must be 5/8"min. Brakes must be in good working order on all four corners. Front and rear hubs may be replaced with heavy-duty after-market hubs. Any non-mechanical traction control device intended to limit wheel slip is prohibited. No wiring of any kind permitted to front suspension.

18) SAFETY EQUIPMENT - All drivers must be protected at all times with Nomex SFI 3.2 A/5 fire suit, seat belts, shoulder harness, headrest, and helmet with a **SA2010** or later Snell rating. SFI 3.3/5 gloves, SFI 3.3/5 driving shoes and fire resistant underwear are highly recommended. Shoulder and side head restraints as part of the racing seat are required. Seat belts and harness are required to be a five point system with lower crouch belt (six point systems are recommended). Mounting attachment bar for shoulder harness must be at shoulder height of the driver and harness should not bend or change direction as it goes through the seat. Belt systems must be a minimum of 3" SFI approved units, dated no earlier than **2010**. All cars must have a web style window net on the left side window opening with a seat belt latch mechanism on the top front corner. No cord or rope type nets. Fire extinguisher of B or C dry powder type or equivalent must be in every car and be easily accessible to both driver and right side window. A quick release mount is mandatory. Each car should have a fully charged 10 to 13 pound B and C type fire extinguisher in its' pit area.

19) TIRES - Only CMS approved Hoosier 980 tires are permitted. No tire soaking or dressing permitted. Durometer and/or other equipment will be used to check tires. In an effort to cut consumption and/or tire cost, officials reserve the right to establish tire rules, policies or procedures as determined beneficial. No recaps.

20) RADIATORS - Must be mounted in front of the engine and have an overflow tank of no less than 2 quart capacity or have the overflow hose directed up onto the windshield. Radiator mounting must not alter sheet metal. No Glycol based Antifreeze coolant permitted.

21) MIRRORS/RADIOS – Mirrors, 2-way radios or cell phones are NOT permitted in the car. Use of a one way radio receiver for communication from track officials to drivers is mandatory. Scanners may not be programmed to any frequency other than CMS mandated frequency. Scanners must be in full view, mounted toward the center of the interior.

22) PAINTING - Must be presentable. Numbers must be at least 18" tall on both doors and 4" in upper right hand corner of windshield. Competitors are to reserve the rear 24 inches of front fenders and the first 6 inches of the roof for Sanctioning Body and/or Track Sponsors. (Failure to run sponsor decals may result in penalty.) Car owners must register for number, with seniority prevailing. Cars MUST display their car number in 4" or more numerals on the rear filler/bumper cover.

23) INSPECTION - Inspection of all cars will be subject to official approval. Workmanship and appearance will be a determining factor in whether officials permit cars to enter competition. Upon cars first appearance of season, it may be permitted to compete ONE NIGHT provided minor constructional variances from the rules do not, in the opinion of the officials, vary drastically from the rules. Officials ARE NOT obligated to any grace period on rule infractions at any time. Officials' decisions are final. There will be an initial registration fee of $25, which will reserve exclusive rights to a number for the season. If a purchased number goes unused, it may be sold to someone else. In that event, there will be no refund of fees.

2016 COLUMBUS MODIFIED SPECIFICATIONS

1) This division limited to 1964 to present American made vehicles with parallel frames. All cars must maintain a minimum wheelbase of 108".

2) BODY – Body must be same width, front to rear, and parallel to the OEM frame. Fabricated body parts may be made of steel, aluminum, or fiberglass. (No carbon fiber). Engine compartment must remain open on both sides. Hood sides may have a maximum 6" drop and must be enclosed to front firewall. No panel in front of right door to engine compartment. No inner panels. Must have front windshield support and rear window support posts (painted roll bars are not acceptable). Driver and passenger side windows must have at least 12 inch by 18 inch opening (*height and width*), measured at center of window, between lowest point at top of window, weather roof or roll cage, and the highest point at bottom of window, weather interior or body. **Sail panel design must match from side to side.** Use of Lexan in sail panels is permitted. No full windshields. Roofs must be fiberglass or aluminum (*no carbon fiber*) full size, rounded and stock appearing *(Roof panels must be convex. No flat or concave roofs side to side or front to back)*. Roof panel must be no more than 4" above roll cage. Roof must be single panel material. (No multi layer roofs). Must run full upper and lower nose. No plastic body parts. Exception: Howe part #'s 622 & 624 along with the MD3 plastic nose piece (part # 020-410) available through Performance Bodies and Five Star Bodies are the only approved plastic body parts**.** No wings or aerodynamic devices inside, outside or under the car. Outside of tires must be the widest part of car. Body Sides must remain perpendicular and not be flared out. Body width should be the same at the top and bottom of the panels. Quarter panels and B/C pillars (sail panels) must be 2 distinct pieces. Sail panels must be on a single plane (not concave or convex). Oil coolers/radiator must not protrude above interior or outside of body. No raised edges, external lips or flairings (vertical or horizontal) on any body edges, nose pieces or wheel openings will be permitted. Bodies on both sides must extend no further forward than the rear of the engine block. NOTE: A 10" by 20" portion of the front of each body side must be set aside for NASCAR contingency sponsor decals.

3) DRIVER COMPARTMENT - Must have a minimum 3 windshield bars in front of the driver. Lexan or aluminum cowl panel in front of the driver can be no wider than the cockpit and no farther back than the steering wheel. Minimum .125 inch aluminum, or 22 (.035 inch) gauge steel, complete floor pan required. Aluminum high back seat only and must be bolted in securely, inside the left OEM frame and ahead of the rear tires. Bottom of seat can be no lower than bottom of frame. NASCAR style right and left head and shoulder supports are required. Driver must be sealed off from track, driveline, engine, fuel cell, battery and pumps. No driver adjustable devices allowed in cockpit except brake adjusters.

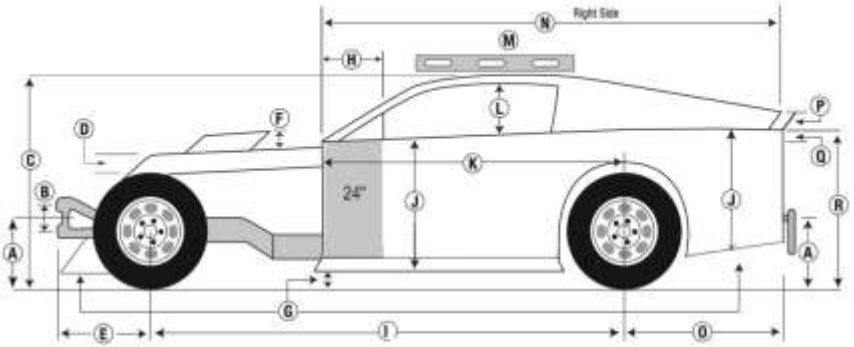

Shaded area reserved for Series and/or Track Sponsor Decals. MUST DISPLAY DECALS TO BE ELIGIBLE FOR FULL PURSE.

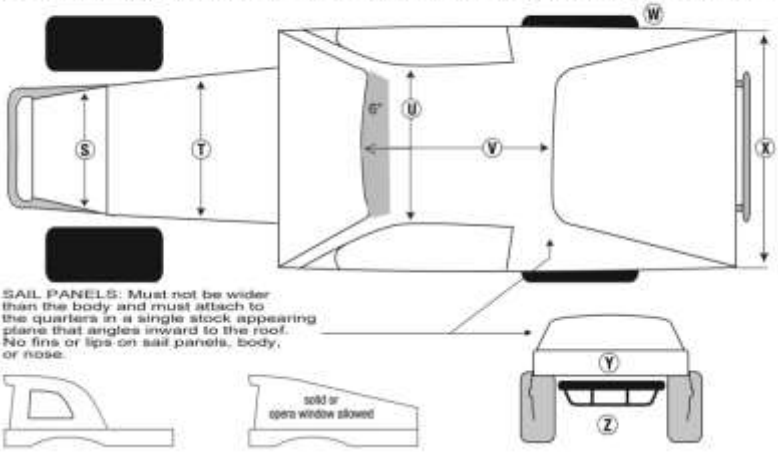

ASPHALT BODY DIAGRAM & DIMENSIONS

(A) 20” Max. – 16” Min. (Ground to center of bumper front & rear)
(B) 6.5” Min. (Center to center)
(C) 46” Max. – 42”Min.
(D) 6” Max. Hood sides – 3” Max. Rake in hood.
(E) 32” Max. (Bumper & Nose)
(F) 6” Max. (Scoop/Deflector)
(G) 4” Min. at Nose and Sides– 8” Min. at Quarters
(H) 19” Max. (Same both sides)
(I) 112” Max. – 108” Min.
(J) 29” Max. – 22” Min.
(K) 72” Max. Or not past back of block, right side. Left side may extend forward to cover foot box if necessary.
(L) 18” Max. – 12” Min. Opening, both sides.
(M) With 4’ level in the center of the roof, must have 2” gradual clearance at rear and no more than 5” at front. Windshield visors will be considered part of the roof for this measurement.
(N) 117” Max. – 106” Min.
(O) 45” Max. – 34” Min.
(P) 3” Max. Height at rear of sail panel, gradual slope from roof to this point. (4” x 66” Max. spoiler is allowed with supports to the rear only. Spoilers will be a flat piece of transparent material with no ledges, lips or breaks. Spoilers may be mounted at any angle.)
(Q) Interior slope is 6” Maximum. Front to rear and flat across. Slope may be a maximum of 3” to the back of driver and a maximum 3” from there, back to the spoiler. If flat at front half of interior you have used up 50% of your 6” so from behind the driver to the rear you only have 3” of slope. Top of interior must be flush with top of doors and quarter panels.
(R) 38” Max. – 28” Min.
(S) 38” Max. – 24” Min. **Measured at the center of the spindles, forward.**
(T) 66” Max. – 24” Min. No narrower than radiator
(U) 52” Max. – 44” Min.
(V) 56” Max. – 41” Min.
(W) Tires must be the widest part of the car. Must be able to see side wall of tire from front, top, and rear.
(X) 66” Max. – 53” Min.
(Y) 8” Panel / 90 degrees to ground. Must be solid, attached to the deck and extend to the quarter panels, securely fastened.
(Z) Aluminum “I” beam or tubular steel rear bumpers allowed; must have rounded nerf bars that follow quarter panel and connect back to frame on both sides.

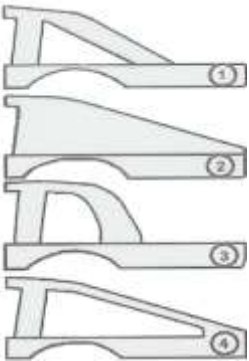

4) REAR DECK SPOILER - Must be made of a single piece of see-through material maximum 4" high and no wider than 66". No spill boards or verticals allowed. Spoiler may be mounted no more than 45" behind center of rear axle. Spoiler may be braced from the rear only. Rear facing lips of no more than 1" will be permitted (lips must be perpendicular to spoiler surface). C pillars may not be more than 2" tall at the rear of the quarter panel and must end at least 0.5" in front of spoiler.

5) REAR BODY PANEL – Cars must have a solid perpendicular rear panel at least 8" high and include car number markings.

6) REAR DECK - Top surface of deck-lid must not be dished. Decks are permitted a maximum of 3" slope from behind driver to rear of deck.

7) WINDSHIELD/WINDOWS - Lexan/ polycarbonate front windshield and rear quarter windows (at least 3/16" thick) are permitted. No full windshields. No Driver or Passenger windows are permitted. Interior panels may not be higher than side panels where minimum 12" window clearance is measured. Minimum window height measurement will be around the complete perimeter of the roof**.** No interior ducting may be used or attached to "B" pillar.

8) SUSPENSION –. All components must be steel, unaltered OEM, in OEM location, and replaceable by OEM parts. Exceptions: Tube type upper A frames with or without aluminum or steel cross shaft, and mounts can be moved; stamped steel OEM replacement lower a-frames; rubber, nylon, or steel lower a-frame bushings; no offset bushings; welded or bolted shock mounts on lower a-frames; (No fabricated lower a-frames); Lower a-frames must be right and left, and of the same design. Lower a-frame mounts and bolt holes on frame must be in OEM location. OEM type ball joints only. Sway bar must be OEM type, no splined bars. Front springs must be of standard dimensions and maintain a minimum of 500 lbs. spring rate. Two percent manufacturing allowance (10 lbs.) will be permitted. Springs measuring below 490 lbs. will be confiscated. Front cross members will maintain a maximum ground clearance of 3.5". Only steel square tubing, round tubing or C-channel with a minimum thickness of .095 "welded or bolted to the bottom of the cross member will be permitted to comply. Cross member travel must be sufficient to allow it to touch the ground plane when suspension is artificially collapsed. Bump stops or bump stop shock mounts are not permitted. Shocks may be replaced or relocated. Shock absorbers must be, non-adjustable, with no external canisters, and have a racer price of less than $360.00 new per shock. One (1) shock per wheel, with one (1) additional shock allowed in the lift / pull bar area. No air shocks. No shock covers. No clicker shocks; externally or internal shaft adjustable shocks permitted. (Shrader valves permitted). Wedge bolts are permitted. Rear suspension may be leaf or coil springs. All rear springs are limited to 4.5" diameter or larger. Rear coil-over suspension is permitted. No fifth coil or birdcage rear suspensions permitted. No fiberglass springs permitted. No torsion bar suspension in rear. Rear axle radius rods may be replaced and/or relocated. Rubber bushings or spring actuated torque arms are permitted on rear suspension arms. No hydraulic, ratchet or electric screw suspension adjustment devices are permitted. No aluminum wheels, hubs, calipers, A-frames, spindles. Aluminum rear panhard bar adjusters are permitted.

9) STEERING – No rack and pinion. All components must be steel, unaltered OEM, in OEM location. **Exceptions:** tie rod ends and adjuster sleeves may be replaced by a minimum .625 inch steel rod ends and steel tubes; OEM spindles can be modified for ball joints and tie rod ends; Cast or forged passenger car drop spindles allowed; (*No made for racing or fabricated spindles*.) Bolt on spindle savers allowed; spindles must be right and left, and of the same design; steel steering shafts and knuckles only; steering quickener, steering wheel and quick release may be aluminum; driver compartment steering may be modified, but must be kept on left side. OEM center link or OEM after market type center links allowed.

10) BUMPERS - Bumpers must be used front and rear. Two bar front bumper must be mounted frame end to frame end, no more than 4" wider than width of OEM frame horns. Bottom loop must be parallel to the ground. Top loop must be directly above lower loop, a minimum 6.5 inches apart, measured center to center. Front bumper should be constructed from a minimum 1.25" O.D. tubing; .065" wall thickness and be able to support the weight of the front of the car. Rear bumper may be no wider than the body and rear bumpers ends must be rounded and connected to the rear quarter panel or rear nerf bar. Rear bumpers may be constructed of tubing, flat stock or aluminum I-beam, but must protect fuel cell. Both front and rear bumpers must be 18" above ground plane (plus or minus 2"). Side nerf bars will be a maximum of 1.50" in diameter. Bars must be rounded on both ends and turned in to connect to the chassis / roll cage.

11) FRAME -1964 or newer OEM perimeter American made rear wheel drive passenger car frame only. (*Reproduction 68-72 Chevelle frames are approved*). No sports car frames. No 2002 & up Ford Crown Vic or similar frames allowed. No strut front suspension of any kind allowed. No tube clips allowed. Frame must be full and complete, cannot be widened or narrowed, and must be able to support roll cage on both sides. Front cross members and lower A-frame mounting points must be stock for frame clip used. **Exceptions:** Weight jack in original center line of spring tower; frame may be cut a maximum 36 inches forward from center of rear housing; horns may be removed in front of steering box; front cross member may be notched and boxed for radiator and/or steering clearance; maximum 7 inch wide opening in side of spring tower for spring removal. OEM upper A frame mounts may be replaced with aftermarket mounts. Maximum 4 inch wide by 4 inch tall frame stiffener may be welded directly to outside of left OEM frame rail and will be considered part of the frame for ground clearance measurements. Left side OEM frame rail may be notched for seat and foot clearance. Minimum wheelbase 108 inches, maximum 112 inches, both sides will be permitted. Maximum over all width, front and rear, shall not exceed 78 inches from outside of tire, to outside of tire. No part of frame or body shall be lower than 4 inches from ground in race trim, except the front cross member.

12) ROLL CAGES - Full cage required, with four uprights -at least 1.625" O.D. with .095" thickness- welded to main perimeter frame rails. With rear support bars, cage must be welded to frame in six locations. Top of cage should form a box, follow the contour of the windshield in front and conform to body dimensions. Roll cage must be securely supported and braced with minimum 1 cross bar in top halo. Driver's head must not protrude above roll cage when strapped in seat with helmet on. Four door bars are required on driver side and two on passenger side. Driver side door bars must be plated with a minimum 16 gauge (.065") steel plate. Door bars must run horizontal between front and rear roll cage posts and be connected by uprights. Door bars may not be inside frame rails or cause undue difficulty in driver entrance or exit of vehicle. Gussets and bracing should be used where possible. Bars around driver must be padded. SFI spec 45.1 padding is required. Cages must be approved.

13) INTERIOR - All cars must have complete firewall, front and rear. Front firewall extending from the left side frame rail to the right side of driver compartment is required. It must extend under the driver including the foot pedal area and rear firewall directly behind the driver and must be at least 20-gauge steel. The remaining interior may be aluminum (.025" min.). Driver's compartment must be totally sealed from engine bay and racing surface. Interior panel beside driver may have a maximum slope of 3" front to back from A pillar to back of driver's seat. Top of interior must be flush with top of side body panels. An optional escape right side route may be used by sloping the interior material from the top of the right body panel into the driver's compartment no higher than 12" from floor pan. Front and rear of driver's compartment must be perpendicular. An aluminum racing seat required, bolted/welded to chassis or roll cage.

14) FUEL CELL – Maximum 22 gallon SFI approved commercial type fuel cell bladder with foam insert required. Cell must be in a minimum 22 gauge square or rectangle in shape (no tear drop, wedge, or exotic F-1 type fuel cells allowed) steel container. Cell must be mounted in trunk area between frame rails, with bottom of cell no lower than the bottom of the rear end center section. Cells must be secured by a frame work using a minimum of 1" square tubing. Rear protective bars between frame rails are required.

15) WEIGHT - Cars must weigh a minimum of 2,400 lbs, wet with driver. Any added weight must be painted white, identified with car number and securely bolted, or welded to chassis. No weight outside of the body. No titanium, carbon fiber, or exotic materials used on race car. No gun-drilled, tubular, hollow bolts or studs. Steel fasteners only. Left side weight is not to exceed 58%.

16) ENGINE - Any displacement factory produced V8 engine with cast iron block permitted. Cast iron and aluminum cylinder heads permitted. Engines must maintain stock outside appearance. Engine location will be a minimum of 72" from back of engine block to center of rear axle. Engine offset must be kept within 2 inches of centerline of front cross member with engine level. Minimum 11 inches from centerline of crank shaft to ground. No dry sump oiling systems or external oil pumps permitted. Single stage external pumps are allowed as long as oil remains in pan (no external tanks). Engine, chassis and body manufacturer need not match. Carburetion limited to one US manufactured 2 or 4 barrel carburetor. Intake manifolds must be of aluminum or cast iron construction. Any stock or after-market replacement for stock distributor may be used. Magneto and/or multiple coil type ignition systems are not permitted. Ignition control boxes (MSD boxes) must be mounted out of driver's reach while in seat. Ignition switch should have "on-off" positions marked and within easy reach of the driver and track personnel.

17) EXHAUST SYSTEM - Must be safe and meet approval. **MUFFLING DEVICES ARE MANDATORY**. Exhaust pipes may not pass through the driver's compartment. Exhaust pipes must exit away from driver with turndowns. Right side exhaust must exit under the car (not out right side door). Noise levels will be monitored with a decibel meter and violators may be fined or disqualified.

18) STARTERS/BATTERIES - All cars must have working starter and battery. All batteries must be securely mounted & covered.

19) FUEL SYSTEM - Fuel lines must be securely mounted and protected. Fuel lines running through the driver's compartment must be "Aeroquip" steel braided or equivalent. No electric fuel pumps permitted.

20) FUEL - Only straight gasoline racing fuel, methanol alcohol or E85 are permitted. No nitro or nitrous oxide.

21) DRIVE TRAINS – Manual transmissions are permitted with 2, 3 or 4 forward and reverse gears in working order. No 5 speed transmission. No hand clutches or "in and out" boxes. Explosion proof bell housings or a minimum ¼" steel scatter shield are required on vehicles using clutches located in the bell housing. Drive shafts must a minimum of 2.5" diameter steel shaft and have at least one 360-degree safety strap/loop directly behind front universal joint. Any steel approved OEM passenger car or truck rear end allowed. Closed, steel tube Quick changes allowed. Safety hubs (*floater*) mandatory. Steel axles only. No cambered rear ends. One (1) piece drive flange only. All components must be steel. **Exceptions:** lowering blocks, axle caps, rotor plates, and drive flanges

22) WHEELS/BRAKES - Maximum 8" wheel width permitted. All wheels must be steel-racing type. No bead locks, screws, or wheel mounted bleeder valves. Steel and aluminum wheel spacers are allowed. Wheel lugs must be 5/8"min. Brakes must be in good working order on all four corners. Must maintain minimum OEM dimensions for hub/rotor and calipers, cannot be drilled or lightened. Bolt pattern may be changed. Larger studs allowed. Rear rotors may be aftermarket, minimum .810 inch thick, vented rotors only. No scalloped or drilled rotors. Front and rear hubs may be replaced with heavy-duty after-market hubs. Any non-mechanical traction control device intended to limit wheel slip is prohibited. No wiring of any kind permitted to front suspension.

23) SAFETY EQUIPMENT - All drivers must be protected at all times with Nomex SFI 3.2 A/5 fire suit, seat belts, shoulder harness, headrest, and helmet with a **SA2010** or later Snell rating. SFI 3.3/5 gloves, SFI 3.3/5 driving shoes and fire resistant underwear are highly recommended. Shoulder and side head restraints as part of the racing seat are required. Seat belts and harness are required to be a five point system with lower crouch belt (six point systems are recommended). Mounting attachment bar for shoulder harness must be at shoulder height of the driver and harness should not bend or change direction as it goes through the seat. Belt systems must be a minimum of 3" SFI approved units, dated no earlier than **2010**. All cars must have a web style window net on the left side window opening with a seat belt latch mechanism on the top front corner. No cord or rope type nets. Fire extinguisher of B or C dry powder type or equivalent must be in every car and be easily accessible to both driver and right side window. A quick release mount is mandatory. Each car should have a fully charged 10 to 13 pound B and C type fire extinguisher in its' pit area.

24) TIRES - Only CMS approved 980 Hoosier tires are permitted. No tire soaking or dressing permitted. Durometer and/or other equipment will be used to check tires. In an effort to cut consumption and/or tire cost, officials reserve the right to establish tire rules, policies or procedures as determined beneficial. No recaps.

25) RADIATORS - Must be mounted in front of the engine and have an overflow tank of no less than 2 quart capacity or have the overflow hose directed up onto the windshield. Radiator mounting must not extend through sheet metal. No Glycol based Antifreeze coolant permitted.

26) MIRRORS/RADIOS - Mirrors and 2-way radios are NOT permitted in the car. Use of a one way radio receiver for communication from track officials to drivers is mandatory. Scanners may not be programmed to any frequency other than CMS mandated frequency. Scanners must be in full view, mounted toward the center of the interior.

27) PAINTING - Must be presentable. Numbers must be at least 18" tall on both doors and 4" in upper right hand corner of windshield. Competitors are to reserve the front 24 inches of each door and the first 6 inches of the roof for Sanctioning Body and/or Track Sponsors. (Failure to run sponsor decals may result in penalty.) Car owners must register for number, with seniority prevailing. Cars must display their car number in 4" or more numerals on the rear panel.

28) INSPECTION - Inspection of all cars will be subject to official approval. Workmanship and appearance will be a determining factor in whether officials permit cars to enter competition. Upon cars first appearance of season, it may be permitted to compete ONE NIGHT provided minor constructional variances from the rules do not, in the opinion of the officials, vary drastically from the rules. Officials ARE NOT obligated to any grace period on rule infractions at any time. Officials' decisions are final. There will be an initial registration fee of $10, which will reserve exclusive rights to a number for the season. If a purchased number goes unused, it may be sold to someone else. In that event, there will be no refund of fees.

2016 SPORT STOCK SPECIFICATIONS

1) - This division limited to 1970 to present American made automobiles with a factory (stock) wheelbase of at least 108" (See Body Update Rule).

All Cars Must Remain Stock With Only The Following Modifications:

2) Stock body requirements will be interpreted as a minimum of stock roof, including A & C pillars, quarter-panels and front fenders of model and year of car run. All windshield and rear glass ledges must remain intact.

Wheel openings may be trimmed for tire clearance. Front inner fender wells may be removed so long as complete stock front firewall remains. Trunk area floorboard must be removed. Rear inner fender wells may be removed, however floorboard must extend back to the point where the stock rear firewall and floor join. Doors must be bolted or welded shut. Front and rear bumpers may be replaced with any stock type unit. Rocker panels may be removed. Body, including front nose piece, must maintain a minimum 4''ground clearance wet with driver. After-market nosepieces matching the make and model of body are permitted. Lower after-market spoilers are not permitted. Rear bumpers covers must be stock for the year and model of the car. Front "crash-bars", no wider than front frame horns, no higher than hood, or extended in front of front bumper are permitted. Rub rails between wheel openings no wider than 1.5" mounted flush with the body are permitted. No sharp edges.

(Body Update) This rule is intended to allow some later model bodies to be used on currently legal chassis'. The rule applies to only 108"W.B. Camaro and 114"W.B. Ford (with upper and lower a-frame front suspension) vehicles. Camaros as listed may use 1982-1991 Camaro/Firebird bodies as long as the wheel openings are moved to accommodate earlier 108" wheelbase chassis. Ford vehicles as listed may use 1989-1997 Thunderbird/Cougar bodies as long as the wheel openings are moved to accommodate earlier 114" wheelbase chassis. Cars using this option may use aftermarket stock design / template style nose and rear bumper covers (no dirt or super late model nose pieces). All other body rules listed for stock bodies still apply.

3) SUSPENSION - Suspension mounts may be re-enforced but not relocated. Springs may be replaced so long as replacements use stock location mounting and orientation. **Leaf spring cars must have only 1 front spring mounting location.** The length of the two top upper control arms may be altered but the stock mounting brackets on the frame must be used. A 3100 / 3200 lbs option will be allowed to use fabricated upper control arms as long as they continue to use the stock mounts. Front sway bar may have threaded adjustment installed. Frame must maintain a minimum 4" ground clearance wet with driver. Unibody cars may connect front and rear frame sections with steel tubing provided it is installed below the floor-pan and complies with the 4" minimum ground clearance. Cars with leaf springs may install shackles. Threaded spring spacers that are not externally adjustable are permitted with front springs only. The 3100 / 3200 lbs option will be allowed to use wedge bolts with springs in the stock location. Shock absorbers limited to steel bodied, double wall, non-rebuildable, sealed or welded units. **One shock per wheel only is permitted. Shocks may be moved to allow for jacking device**. Interchangeable valving, Schrader vales or remote reservoirs are not permitted. Single tube panhard bars with non-adjustable mounting points are permitted on rear axles.

4) INTERIOR – All stock seats must be removed. Front seat must be replaced with an aluminum-racing seat with headrest. Full containment seats with shoulder and head restraints are highly recommended. Driver's seat mounting brackets must be attached to the roll cage. Seat backs must be secured. Dashboard, dash gauges, radio and instruments must be removed. Inner door panels, interior door trim and floor coverings must be removed. Any heat reflective material used on the floor or firewall must be Non-Flammable. All cars must have complete stock front firewall, transmission tunnel and left side floor pan. Right side floor may be raised no higher than transmission tunnel for exhaust clearance, but must remain magnetic steel. **No decking inside the four points of the roll cage.** Rear firewall must be of magnetic steel and extend from floor pan vertically to bottom of C-pillar. Full front (stock) and rear firewalls are mandatory. "Foot-well" areas may be replaced for exhaust clearance.

5) HOODS/DECK-LIDS - Door-skins, hood and trunk-lid may be replaced with steel or aluminum provided they remain stock appearing. No hood-scoops or spoilers. Hood cowl induction of no more than 3' will be permitted. Hoods are to be secured by a minimum of 4 hood pins. Deck-lids, similar to stock in size, must be hinged at front and secured by two pins in the rear. No trap- door type openings

6) WINDOWS - All exterior glass except front windshield must be removed. Front windshield must be replaced with 1/8" lexan / polycarbonate. No Plexiglas. Window and door-latch mechanisms must be removed. The angle that front windshield makes with horizontal must be a minimum of 25 degrees.

7) ROLL CAGES - Full cage required, with four uprights welded to frame. Top of cage should form a box and follow the contour of the windshield in front and rear. Front engine compartment loop -connected to roll cage and extending in front of engine and a rear loop behind fuel tank, is mandatory. All cage material must be round steel tubing at least 1.625" O.D. with .095" thickness. No galvanized or square tubing permitted. Three door bars are required on driver side and two on passenger side. Driver side door bars must be plated with a minimum 16 gauge (.065") steel plate. Gussets should be used where possible. Bars around driver must be padded with approved padding. SFI spec 45.1 padding is required. Cages must be approved.

8) PAINTING - Must be presentable. Numbers must be at least 18" tall on both doors and 4" in upper right hand corner of windshield. Competitors are to reserve the rear 24 inches of front fenders and the first 6 inches of the roof for Sanctioning Body and/or Track Sponsors. (Failure to run sponsor decals may result in penalty.) Car owners must register for number, with seniority prevailing. Cars MUST display their car number with 4" or more numerals on the rear of car.

9) RADIATORS - May be replaced so long as it does not alter sheet metal. Must have an overflow tank of no less than 2-quart capacity or have the overflow hose directed up onto the windshield. No Glycol based Antifreeze coolant permitted.

10) FUEL CELL - Maximum 22 gallon commercially made fuel cell bladder with foam insert required. Cell must be mounted in a rectangular can made of magnetic steel. Plastic fuel cells will not be permitted. Cell must be mounted in trunk area, between frame rails, with bottom of cell no lower than the centerline of the rear axle. Cells must be secured by a frame work using a minimum of 1" square tubing that is attached to the main frame rails. All fuel systems are subject to inspection and approval.

11) WEIGHT – Non full frame (sub frame) cars must weigh a minimum of 3,100 lbs wet with driver. A 3,200 lbs option will allow any or all of the following rule variations:

- Fabricated front upper control arms using the stock mounts.
- Wedge bolts on springs in stock location.
- Aluminum intake manifold.

Full frame cars must weigh 3,000 lbs with a 3,100 lbs option for the modifications listed above.

Cars utilizing the 3,100/3,200 lbs option will not be given a fuel allowance after an event. They must weigh the minimum as they come off the track.

Left side weight is not to exceed 56% for full framed cars and 54% on sub frame cars.

12) ENGINE - May be replaced with a factory-produced engine so long as the engine manufacturer matches that of the body and chassis. Engine block and cylinder heads must be cast iron. Valve covers and oil pan may be changed. Any internal modifications are permitted. Any cast iron, factory produced intake manifold may be used. A 3100 / 3200 lbs option will be permitted to use aluminum intake manifolds. Engine must be located so that the forward most spark plug is even with or in front of a line connecting the two top ball joints.

13) CARBURETION - Carburetion limited to one two-barrel US manufactured unit.

14) FUEL - Only straight gasoline or racing fuel is permitted. No nitro or alcohol

15) EXHAUST SYSTEM - Exhaust manifold may be replaced with any factory produced cast iron unit or street type headers. Headers must have primary tubes of no more than 1 5/8" diameter from the flange to the collector; no step headers. No cross over or 180 degree headers. Exhaust pipes may be replaced, but must exit under car and behind the driver with turndowns. Exhaust may not pass through body panels. All cars must have a STREET LEGAL MUFFLING DEVICE. Noise levels will be monitored with a decibel meter and violators may be fined or disqualified.

16) MIRRORS/RADIOS - Mirrors and 2-way radios are NOT permitted in the car. Use of a one way radio receiver for communication from track officials to drivers is mandatory. Scanners may not be programmed to any frequency other than CMS mandated frequency. Scanners must be in full view, mounted toward the center of the interior.

17) DRIVE TRAINS - Transmissions must be stock type manual or automatic and must have forward and reverse gears. Multi disc clutches will be permitted. Drive shafts must have at least one 360-degree safety strap/loop directly behind front universal joint. Nine-inch Ford rear end may be used in any car so long as original suspension mounting brackets are used. Floater rear ends with all steel housings and axle tubes will be permitted.

18) STARTERS/BATTERIES - All cars must have working starter and battery. All batteries must be securely mounted & covered in trunk area or engine compartment.

19) FUEL LINES - Fuel lines must be securely mounted and protected. Fuel lines running through the driver's compartment must be high-pressure aircraft or completely covered by metal shielding. No electric fuel pumps permitted.

20) SAFETY EQUIPMENT - All drivers must be protected at all times with Nomex SFI 3.2 A/5 fire suit, seat belts, shoulder harness, headrest, and helmet with a **SA2010** or later Snell rating. SFI 3.3/5 gloves, SFI 3.3/5 driving shoes and fire resistant underwear are highly recommended. Shoulder and side head restraints as part of the racing seat are highly recommended. Seat belts and harness are required to be a five point system with lower crouch belt (six point systems are recommended). Mounting attachment bar for shoulder harness must be at shoulder height of the driver and harness should not bend or change direction as it goes through the seat. Belt systems must be a minimum of 3" SFI approved units, dated no earlier than **2010**. All cars must have a web style window net on the left side window opening with a seat belt latch mechanism on the top front corner. No cord or rope type nets. Fire extinguisher of B or C dry powder type or equivalent must be in every car and be easily accessible to both driver and right side window. A quick release mount is mandatory. Each car should have a fully charged 10 to 13 pound B and C type fire extinguisher in its' pit area.

21) WHEELS/BRAKES - Maximum 8" wheel width permitted. All wheels must be steel racing type. All wheel lugs must be 5/8"with at least 3 threads showing beyond lug nuts. Brakes must be in good working order on all four corners. Brakes are subject to inspection at all times.

22) TIRES - Only CMS approved Hoosier Comanche tires are permitted. Included are Comanche 26.5" x 8" x 15" and 27.5" x 8" x 15". No tire soaking or dressing on track premises. No more than ½ of any tread width may protrude outside body. No recaps.

23) INSPECTION - Inspection of all cars will be subject to official approval. Workmanship and appearance will be a determining factor in whether officials permit cars to enter competition. Upon cars first appearance of season, it may be permitted to compete ONE NIGHT provided minor constructional variances from the rules do not vary drastically. Officials ARE NOT obligated to any grace period on rule infractions at any time. Officials' decisions are final. There will be an initial $5 registration fee that will reserve exclusive rights to a number for the season. . If a purchased number goes unused, it may be sold to someone else. In that event, there will be no refund of fees.

2016 COMPACT SPECIFICATIONS

This division limited to 1980 to present front (2) wheel drive American and Import automobiles with a factory (stock) wheelbase less than 105". Vehicles must have a 4 cylinder engine and automatic transmission. Two door, four door and hatch back passenger cars are permitted. No trucks or SUV's.

All Cars Must Remain Stock With Only The Following Modifications:

2) BODY - All doors, sunroofs and rear hatches must be welded shut. All glass must be removed except the windshield. Glass sunroof openings must be covered with metal. No trimming of body panels. All mirrors (inside and out) must be removed. All exterior bright trim, moldings, lights and lenses must be removed. Added rocker skirts must maintain original body / rocker contour. All body openings as a result of removed headlights, tail lights or rear trim panels must be covered with sheet aluminum or steel.

3) SUSPENSION - Suspension must remain unaltered. Springs and shocks may be replaced so long as they are direct OEM replacements. Camber of right front wheel may exceed factory specifications. No 4 wheel steering.

4) INTERIOR – All seats other than drivers' must be removed. Driver's seat must be replaced with an aluminum-racing seat. Seat mounting brackets must be attached to the roll cage. Seat backs must be secured to the roll cage. All flammable trim material must be removed other than dashboard. Dash gauges and instruments, radio/cassette-CD players may be removed.

5) HOODS/DECK-LIDS – Hood and trunk-lid latches must be removed and stock hinges remain. Hoods and deck-lids are to be secured by a minimum of 2 hood pins.

6) WINDOWS - All exterior glass except front windshield must be removed. Front windshield may be replaced with 1/8" lexan**/** polycarbonate secured with bolts or rivets. No Plexiglas. Window and door-latch mechanisms may be removed.

7) ROLL CAGES - Four point roll cages, made of 1-3/4"O.D. x .095 tubing are required. Two uprights must be located in the furthest forward corners of the driver's compartment and two uprights must be behind driver. All uprights should be located as far towards the outside of the car as practical. Top of cage should form a box and follow the contour of the windshield in front. The uprights must be welded to a 4" x 4", 1/8" steel plate that is either welded or sandwich bolted to the body. No galvanized or square tubing permitted. A horizontal bar connecting the two rear uprights, even with the top of the drivers' seat back, is mandatory. Two cage support bars from the top hoop or rear up rights, running rearward to the rear seat floor area, at an approximately 45-degree angle are required. A dash bar connecting the two front uprights must go along the top of the stock dash board. There will be a minimum of 3 door bars on the drivers' side and two on the passenger side. The drivers' side door may be gutted for door bar installation. Gussets should be used where possible. Welds must be of good quality. The top of cage should be at least 4" higher than the driver when seated with their helmet on. All roll cage components, including door bars, cross bars and support bars must be the same 1 ¾" O.D. x.095" wall tubing. No bars may pass forward through the front firewall or rearward into trunk area. Bars around driver must be padded with SFI spec 45.1 padding. Cages must be approved.

8) PAINTING - Must be presentable. Numbers must be at least 18" tall on both doors and 6" in upper right hand corner of windshield. Competitors are to reserve the rear 24 inches of front fenders and the first 6 inches of the roof for Sanctioning Body and/or Track Sponsors. (Failure to run sponsor decals may result in penalty.) Car owners must register for number on a first come basis.

9) RADIATORS – Must remain stock and have the stock overflow tank of no less than 2-quart capacity. No Glycol based Antifreeze coolant permitted. Coolant must be water only.

10) FUEL CELL – Vehicles with stock in-tank fuel pumps must use stock fuel tank. Vehicles with external fuel pumps are permitted a maximum 8 gallon commercially made fuel cell. Cell must be mounted inside trunk area strapped to trunk floor, between frame rails. All fuel systems are subject to inspection and approval.

11) ENGINE – Engines are limited to stock, for the model vehicle, 4 cylinder engines with single overhead cam or push rod/rocker arm head configurations only. Maximum of 3 valves per cylinder is permitted. No dual over head cams. No turbo or superchargers. No rotary engines.

12) CARBURETION / INJECTION – Induction system must remain stock manufacture unit. No aftermarket throttle bodies or mass air flow sensors. Stock air filter housing and connections must be used.

13) FUEL / FUEL LINES - Only straight gasoline or racing fuel is permitted. No nitro or alcohol. Fuel lines must be securely mounted and protected

14) EXHAUST SYSTEM - Exhaust manifold must be the factory produced unit for the model vehicle used. Exhaust pipes may be replaced, but must exit under car and behind the driver with turndowns. Exhaust may not pass through body panels. All cars must have a STREET LEGAL MUFFLING DEVICE. Noise levels will be monitored with a decibel meter and violators may be fined or disqualified.

15) MIRRORS/RADIOS - Mirrors and 2-way radios are NOT permitted in the car. Use of a one way radio receiver for communication from track officials to drivers is mandatory. Scanners may not be programmed to any frequency other than CMS mandated frequency. Scanners must be in full view, mounted toward the center of the interior.

16) DRIVE TRAINS – Drive trains are limited to, two wheel front drive only. Transmissions must be stock automatic unit and must have all forward and reverse gears.

17) STARTERS/BATTERIES - All cars must have stock working starter. Stock column ignition switch must remain intact and operating with key. A quick release steering wheel and hub will be permitted on stock column. All batteries must be securely mounted & covered in stock location.

18) SAFETY EQUIPMENT - All drivers must be protected at all times with Nomex or equivalent fire suit, seat belts, shoulder harness, and helmet with a **SA2010** or later Snell rating. Seat belts and harness are required to be a five point system with lower crouch belt (six point systems are recommended). Mounting attachment bar for shoulder harness must be at shoulder height of the driver and harness should not bend or change direction as it goes through the racing seat if used. Belt systems must be a minimum of 3" SFI approved units, dated no earlier than **2010**. All cars must have a web style window net on the left side window opening with a seat belt latch mechanism on the top front corner. No cord or rope type nets. Each car should have a fully charged 10 to 13 pound B and C type fire extinguisher in its' pit area.

19) WHEELS/BRAKES - Maximum 6" width stock steel wheels are permitted. OEM alloy wheels with a maximum width of 6" will be permitted on the right front only. No aftermarket or chromed wheels. All four wheels must be the same size and offset. All wheel lugs must have at least 3 threads showing beyond lug nuts. Brakes must be in good working order on all four corners. Brakes are subject to inspection at all times.

20) TIRES – Only CMS approved Hoosier S.T.A.R.T. tires are permitted. Only 790 compound 23.0/ 7.0 -13 (Item # 10400) and 23.0/ 7.0 -14 (Item # 10405) will be permitted. All four tires must be the same size. No tire soaking or dressing on track premises. No recaps

21) INSPECTION - Inspection of all cars will be subject to official approval. Workmanship and appearance will be a determining factor in whether officials permit cars to enter competition. Upon cars first appearance of season, it may be permitted to compete ONE NIGHT provided minor constructional variances from the rules do not vary drastically. Officials ARE NOT obligated to any grace period on rule infractions at any time. Officials' decisions are final. There will be an initial $5 registration fee that will reserve exclusive rights to a number for the season.

If a purchased number goes unused, it may be sold to someone else. In that event, there will be no refund of fees.